DATASHEET

Semiconductor Optical Amplifier (SOA) Optical Spectral Engine G7: 14-Pin Butterfly Package, Center Wavelength: 775nm, PM Fiber, High Degree of Polarization, Spectral Coverage: 766nm-784nm, FWHM: 18nm, Gain 23dB, Saturation 14dBm

Part# ASM006003

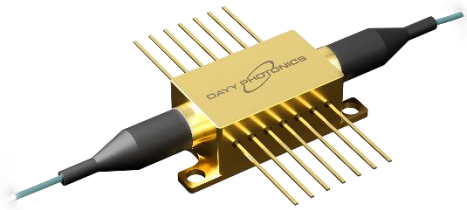

#DAY-OSE7-775-PM-HP-766_784-18-14-23_2025_01_01

This document is the property of DAYY Photonics, and contains proprietary information. DAYY Photonics reserves the right to make product design or specification changes without notice.

DAYY Photonics Corporation 4030 8 St SE, Calgary, Canada, T2G 3A7
sales@dayyphotonics.com, +1(587)328-0739, www.dayyphotonics.com

PRODUCT DESCRIPTION

The Semiconductor Optical Amplifier (SOA) at 775nm is designed by using a high quality angled multi-quantum-well SOA chip in a 14-pin butterfly package with TEC/thermistor for closed-loop temperature control which can assure a stable amplified output for a large dynamic input signal.

The SOA device has high small signal gain, high saturation output power, high polarization extinction ratio, low noise figure and broad wavelength bandwidth. The product is Telcordia GR-468-CORE qualified and in compliance with RoHS and REACH Directives.

KEY FEATURES

- Center Wavelength 775nm
- Small Signal Gain: >23dB
- Bandwidth FWHM: >18nm
- Max Optical power: >14dBm
- Light output: FC/APC Connector
- Integrated Thermoelectric cooler and thermistor

APPLICATIONS

- Optical Component Testing
- Telecom Test Equipment
- Medical Optical Coherence Tomography
- Industrial Optical Coherence Tomography
- Metrology
- Fiber Optic Gyroscopes
- Biomedical Imaging Systems
- Optical Sensing
- White Light Interferometry & Chromatic Dispersion
- Research and Development

This document is the property of DAYY Photonics, and contains proprietary information. DAYY Photonics reserves the right to make product design or specification changes without notice.

DAYY Photonics Corporation 4030 8 St SE, Calgary, Canada, T2G 3A7
sales@dayyphotonics.com, +1(587)328-0739, www.dayyphotonics.com

A. Performance Specifications Absolute Maximum Ratings

Stresses in excess of the absolute maximum ratings can cause permanent damage to the device. These are absolute stress ratings only. Functional operation of the device is not implied at these or any other conditions in excess of those given in the operational sections of the data sheet. Exposure to absolute maximum ratings for extended periods can adversely affect device reliability.

Parameter	Symbol	Condition	Min.	Typical	Max	Unit
Storage Temperature	Ts	-	-40	-	+85	°C
Operating Case Temperature	T_{case}	-	-10	-	+70	°C
SOA Forward Current	I_F	-	-	-	350	mA
SOA Reverse Voltage	V_R	-	-	-	1.5	V
TEC Current	I_{TEC}	-	-1.5	-	+1.5	A
TEC Voltage	V_{TEC}	-	-4.0	-	+4.0	V

B. Optical Characteristics (SOA chip temperature at 25℃)

Parameter	Symbol	Condition	Min.	Typical	Max	Unit
Center Wavelength	λc	-	-	775	-	nm
3dB Optical Bandwidth	Δλ3dB	-	-	18	-	nm
Saturation Output Power (@-3dBm)	P_{sat}	CW	-	14	-	dBm
Small Signal Gain (@Pin=-20dBm)	G_{max}	-	-	23	-	dB
Polarization Extinction Ratio	PER	-	-	20	-	dB
Noise Figure	NF	-	-	10	12.1	dB
Gain Ripple (rms)	Gr	-	-	-	0.28	dB

C. Electrical Characteristics (SOA chip temperature at 25℃)

Parameter	symbol	Condition	Min.	Typical	Max	Unit
Operating Current	I_{op}	-	-	300	320	mA
Laser Forward Voltage	V_F	P_o=P_{sat}	-	2.1	2.7	V
TEC Set Temperature	T_S	-		25		°C
TEC Current	I_{TEC}	T_L=25C, T_c=70C	-1.5	-	+1.5	A
TEC Voltage	V_{TEC}	T_L=25C, T_c=70C	-4.0	-	+4.0	V
Thermistor Current	I_{TC}	-	10	-	100	µA
Thermistor Resistance	R_{TH}	T_L=25C	9.5	10	10.5	KΩ
Thermistor Constant	B	-	3800	-	4100	k
Thermistor Temperature	-	-	-	-	100	°C

This document is the property of DAYY Photonics, and contains proprietary information. DAYY Photonics reserves the right to make product design or specification changes without notice.

DAYY Photonics Corporation 4030 8 St SE, Calgary, Canada, T2G 3A7
sales@dayyphotonics.com, +1(587)328-0739, www.dayyphotonics.com

D. Input\Output Fiber

Parameters	Description
Fiber Type	PM780-HP
Pigtail Type	900µm loose tube
Pigtail Length	1.0±0.1m
Connector Type	FC/APC (Narrow Key)

E. MECHANICAL DIAGRAM (mm)

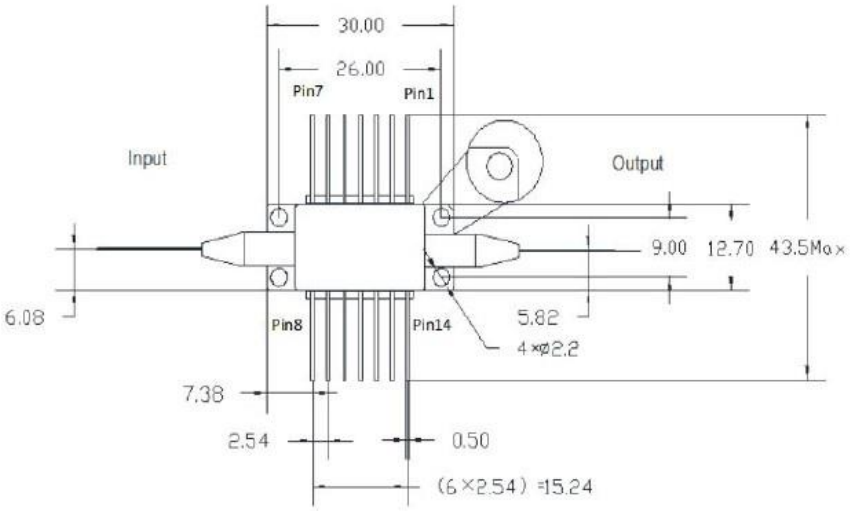

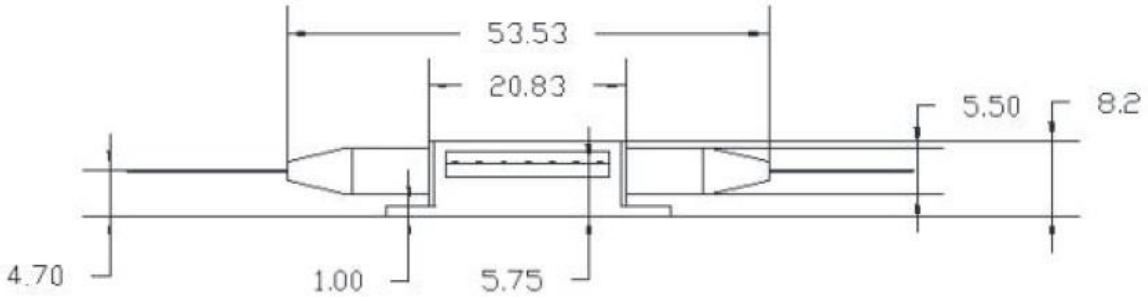

This document is the property of DAYY Photonics, and contains proprietary information. DAYY Photonics reserves the right to make product design or specification changes without notice.

DAYY Photonics Corporation 4030 8 St SE, Calgary, Canada, T2G 3A7
sales@dayyphotonics.com, +1(587)328-0739, www.dayyphotonics.com

F. GRAPHS

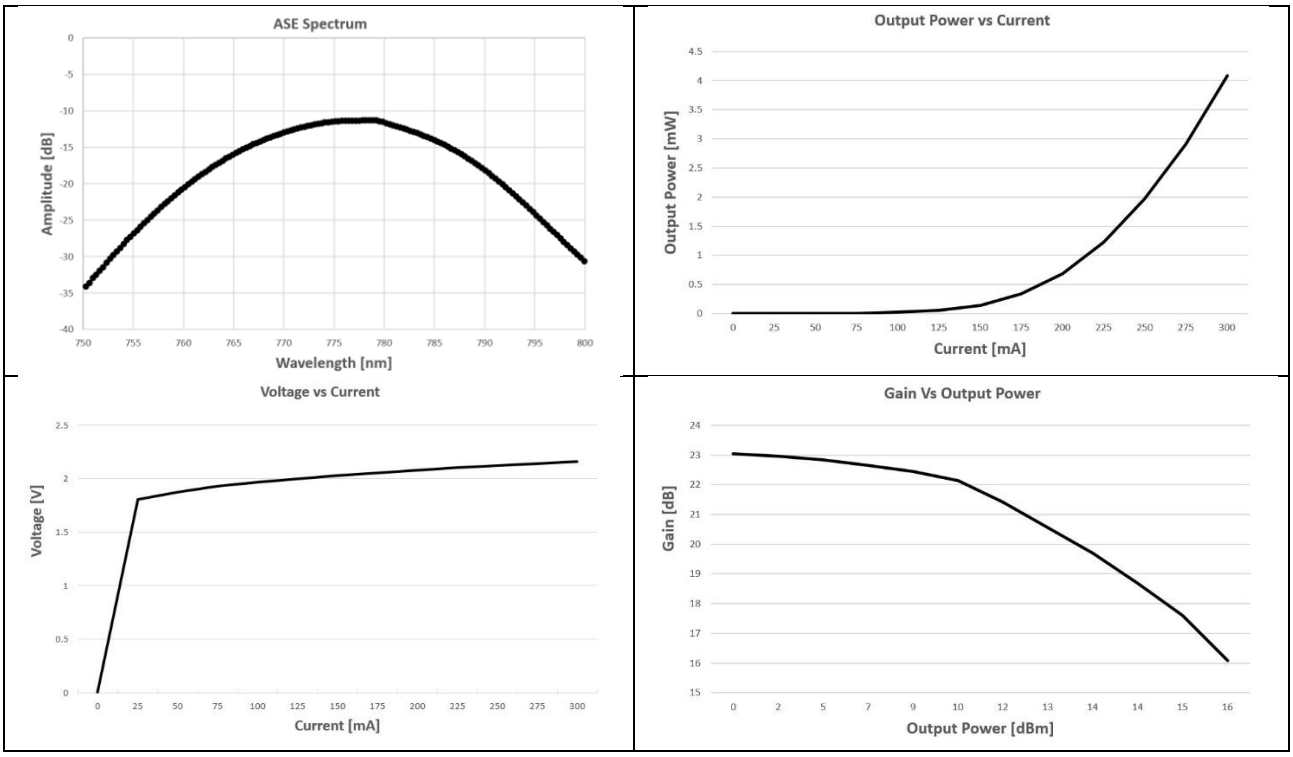

G. PIN OUT

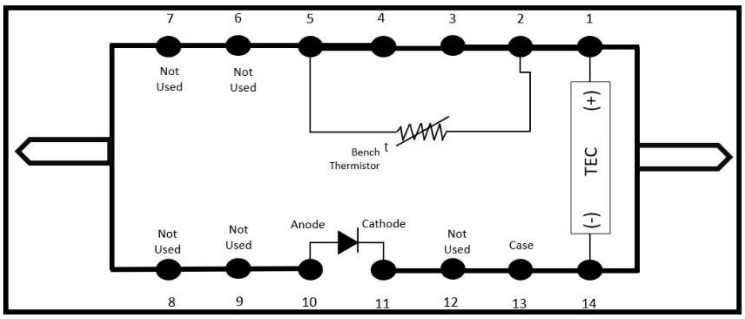

1	TEC (+)	8	Not Used
2	Thermistor	9	Not Used
3	Not Used	10	Device Anode
4	Not Used	11	Device Cathode
5	Thermistor	12	Not Used
6	Not Used	13	Case Ground
7	Not Used	14	TEC (-)

This document is the property of DAYY Photonics, and contains proprietary information. DAYY Photonics reserves the right to make product design or specification changes without notice.

DAYY Photonics Corporation 4030 8 St SE, Calgary, Canada, T2G 3A7
sales@dayyphotonics.com, +1(587)328-0739, www.dayyphotonics.com

H. MOUNTING RECOMMENDATIONS:

The SOA can be mounted on a flat cooling surface without having to risk forming the pins. Mounting surface should be flat, with no physical obstructions underneath to cause any discontinuity in the surface flatness. If a heatsink is used, the base of the butterfly package will rest on the surface of a heatsink in order to cool the internal TEC.

Maximum torque to avoid damage to the device is 13 lb.in. /1.5 Nm. Minimum torque is 9 lb.in/1.1 nm. Do not use self-tapping screws. This light source should be mounted so that mechanical vibrations cannot cause short circuits between leads. AZIMUTH 7 pin, 0.100" pitch Sockets are recommended. The 14 pins will rest on a pair of spring-loaded sockets and be squeezed between the contacts and a plastic clamp.

I. SAFETY

All statements regarding safety of operation and technical data will only apply when the unit is operated correctly.

This OSA is a Class 1M laser product. It is safe for all conditions of use except when passed through magnifying optics such as microscopes and telescopes. It produces a beam that is divergent. If light is re-focused use protective eye wear.

This document is the property of DAYY Photonics, and contains proprietary information. DAYY Photonics reserves the right to make product design or specification changes without notice.

DAYY Photonics Corporation 4030 8 St SE, Calgary, Canada, T2G 3A7
sales@dayyphotonics.com, +1(587)328-0739, www.dayyphotonics.com